Product datasheet

Specifications

Variable speed drive. Altivar Process ATV600. ATV650. 75 kW. 400...480 V. IP55

ATV650D75N4E

Price: 195,439.72 ZAR

Main

Range Of Product	Altivar Process ATV600
Product Or Component Type	Variable speed drive
Product Specific Application	Process and utilities
Device Short Name	ATV650
Variant	With disconnect switch
Product Destination	Asynchronous motors Synchronous motors
Emc Filter	Integrated with 150 m conforming to IEC 61800-3 category C3
Ip Degree Of Protection	IP55 conforming to IEC 60529 IP55 conforming to IEC 61800-5-1
[Us] Rated Supply Voltage	380...480 V
Type Of Cooling	Forced convection
Supply Frequency	50...60 Hz - 5...5 %
[Us] Rated Supply Voltage	380...480 V - 15...10 %
Motor Power Kw	55 kW (heavy duty) 75 kW (normal duty)
Motor Power Hp	75 hp heavy duty 100 hp normal duty
Line Current	112.7 A at 480 V (normal duty) 98.9 A at 380 V (heavy duty) 86.9 A at 480 V (heavy duty) 131.3 A at 380 V (normal duty)
Prospective Line Isc	50 kA
Apparent Power	72.2 kVA at 480 V (heavy duty) 93.7 kVA at 480 V (normal duty)
Continuous Output Current	106 A at 2.5 kHz for heavy duty 145 A at 2.5 kHz for normal duty
Asynchronous Motor Control Profile	Constant torque standard Variable torque standard Optimized torque mode
Synchronous Motor Control Profile	Synchronous reluctance motor Permanent magnet motor
Speed Drive Output Frequency	0.1…500 Hz
Nominal Switching Frequency	2.5 kHz
Switching Frequency	2...8 kHz adjustable 2.5...8 kHz with derating factor
Safety Function	STO (safe torque off) SIL 3

Excluding VAT and subject to change. Please check with your local distributor through "Where to buy"

Disclaimer: This documentation is not intended as a substitute for and is not to be used for determining suitability or reliability of these products for specific user applications

Discrete Input Logic	16 preset speeds
Communication Port Protocol	Ethernet Modbus serial Modbus TCP
Option Card	Slot A: communication module, PROFINET Slot A: communication module, DeviceNet Slot A: communication module, Modbus TCP/EtherNet/IP Slot A: communication module, CANopen daisy chain RJ45 Slot A: communication module, CANopen SUB-D 9 Slot A: communication module, CANopen screw terminals Slot A/slot B: digital and analog I/O extension module Slot A/slot B: output relay extension module Slot A: communication module, Ethernet IP/Modbus TCP/MD-Link Communication module, BACnet MS/TP Communication module, Ethernet Powerlink Slot A: communication module, Profibus DP V1

Complementary

Mounting Mode	Wall mount
Maximum Transient Current	159 A during 60 s (heavy duty) 159.5 A during 60 s (normal duty)
Network Number Of Phases	3 phases
Discrete Output Number	0
Discrete Output Type	Relay outputs R1A, R1B, R1C 250 V AC 3000 mA Relay outputs R1A, R1B, R1C 30 V DC 3000 mA Relay outputs R2A, R2C 250 V AC 5000 mA Relay outputs R2A, R2C 30 V DC 5000 mA Relay outputs R3A, R3C 250 V AC 5000 mA Relay outputs R3A, R3C 30 V DC 5000 mA
Output Voltage	<= power supply voltage
Permissible Temporary Current Boost	1.5 x In during 60 s (heavy duty) 1.1 x In during 60 s (normal duty)
Motor Slip Compensation	Not available in permanent magnet motor law Automatic whatever the load Can be suppressed Automatic whatever the load
Acceleration And Deceleration Ramps	Linear adjustable separately from 0.01...9999 s
Physical Interface	Ethernet 2-wire RS 485
Braking To Standstill	By DC injection
Protection Type	Safe torque off: motor Motor phase break: motor Thermal protection: drive Safe torque off: drive Overheating: drive Overcurrent between output phases and earth: drive Overload of output voltage: drive Short-circuit protection: drive Motor phase break: drive Overvoltages on the DC bus: drive Line supply overvoltage: drive Line supply undervoltage: drive Line supply phase loss: drive Overspeed: drive Break on the control circuit: drive Thermal protection: motor
Transmission Rate	10, 100 Mbits 4800 bps, 9600 bps, 19200 bps, 38.4 Kbps
Frequency Resolution	Analog input: 0.012/50 Hz Display unit: 0.1 Hz
Transmission Frame	RTU

Electrical Connection	Line side: screw terminal 70...120 mm²/AWG 2/0...250 kcmil Motor: screw terminal 95...120 mm²/AWG 3...250 kcmil Control: removable screw terminals 0.5...1.5 mm²
Connector Type	RJ45 (on the remote graphic terminal) for Modbus serial RJ45 (on the remote graphic terminal) for Ethernet/Modbus TCP
Data Format	8 bits, configurable odd, even or no parity
Type Of Polarization	No impedance
Exchange Mode	Half duplex, full duplex, autonegotiation Ethernet/Modbus TCP
Number Of Addresses	1…247 for Modbus serial
Method Of Access	Slave Modbus TCP
Supply	Internal supply for reference potentiometer (1 to 10 kOhm): 10.5 V DC +/- 5 %, <10 mA, protection type: overload and short-circuit protection Internal supply for digital inputs and STO: 24 V DC (21…27 V), <200 mA, protection type: overload and short-circuit protection External supply for digital inputs: 24 V DC (19…30 V), <1.25 mA, protection type: overload and short-circuit protection
Local Signalling	3 LEDs (dual colour) for embedded communication status 4 LEDs (dual colour) for communication module status 1 LED (red) for presence of voltage 3 LEDs for local diagnostic
Width	345 mm
Height	1250 mm
Depth	436 mm
Net Weight	89.3 kg
Analogue Input Number	3
Analogue Input Type	AI1, AI2, AI3 software-configurable voltage: 0...10 V DC, impedance: 31.5 kOhm, resolution 12 bits AI1, AI2, AI3 software-configurable current: 0...20 mA, impedance: 250 Ohm, resolution 12 bits AI2 voltage analog input: - 10...10 V DC, impedance: 31.5 kOhm, resolution 12 bits
Discrete Input Number	8
Discrete Input Type	DI7, DI8 programmable as pulse input: 0…30 kHz, 24 V DC (<= 30 V)
Input Compatibility	DI5, DI6: discrete input level 1 PLC conforming to IEC 65A-68 STOA, STOB: discrete input level 1 PLC conforming to IEC 61131-2 DI1...DI6: discrete input level 1 PLC conforming to IEC 61131-2
Discrete Input Logic	Positive logic (source) (DI1...DI8), < 5 V (state 0), > 11 V (state 1) Negative logic (sink) (DI1...DI8), > 16 V (state 0), < 10 V (state 1)
Analogue Output Number	2
Analogue Output Type	Software-configurable voltage AQ1, AQ2: 0...10 V DC impedance 470 Ohm, resolution 10 bits Software-configurable current AQ1, AQ2: 0...20 mA, resolution 10 bits Software-configurable current DQ-, DQ+: 30 V DC Software-configurable current DQ-, DQ+: 100 mA
Sampling Duration	5 ms +/- 1 ms (DI5, DI6) - discrete input 5 ms +/- 0.1 ms (AI1, AI2, AI3) - analog input 10 ms +/- 1 ms (AO1) - analog output 2 ms +/- 0.5 ms (DI1...DI4) - discrete input
Accuracy	+/- 1 % AO1, AO2 for a temperature variation 60 °C analog output +/- 0.6 % AI1, AI2, AI3 for a temperature variation 60 °C analog input
Linearity Error	AO1, AO2: +/- 0.2 % for analog output AI1, AI2, AI3: +/- 0.15 % of maximum value for analog input
Relay Output Number	3
Relay Output Type	Configurable relay logic R2: sequence relay NO electrical durability 100000 cycles Configurable relay logic R3: sequence relay NO electrical durability 100000 cycles Configurable relay logic R1: fault relay NO/NC electrical durability 100000 cycles

Refresh Time	Relay output (R1, R2, R3): 5 ms (+/- 0.5 ms)
Minimum Switching Current	Relay output R1, R2, R3: 5 mA at 24 V DC
Maximum Switching Current	Relay output R1, R2, R3 on resistive load, cos phi = 1: 3 A at 30 V DC Relay output R1, R2, R3 on inductive load, cos phi = 0.4 and L/R = 7 ms: 2 A at 250 V AC Relay output R1, R2, R3 on inductive load, cos phi = 0.4 and L/R = 7 ms: 2 A at 30 V DC Relay output R1, R2, R3 on resistive load, cos phi = 1: 3 A at 250 V AC
Isolation	Between power and control terminals
Maximum Output Frequency	500 kHz
Maximum Input Current	131.3 A
Variable Speed Drive Application Selection	Food and beverage processing other application Mining mineral and metal fan Mining mineral and metal pump Oil and gas fan Water and waste water other application Building - HVAC screw compressor Food and beverage processing pump Food and beverage processing fan Food and beverage processing atomization Oil and gas electro submersible pump (ESP) Oil and gas water injection pump Oil and gas jet fuel pump Oil and gas compressor for refinery Water and waste water centrifuge pump Water and waste water positive displacement pump Water and waste water electro submersible pump (ESP) Water and waste water screw pump Water and waste water lobe compressor Water and waste water screw compressor Water and waste water compressor centrifugal Water and waste water fan Water and waste water conveyor Water and waste water mixer
Motor Power Range Ac-3	55…100 kW at 480…500 V 3 phases
Quantity Per Set	1
Enclosure Mounting	Wall mounted

Environment

Insulation Resistance	> 1 MOhm 500 V DC for 1 minute to earth
Noise Level	69.9 dB conforming to 86/188/EEC
Operating Position	Vertical +/- 10 degree
Maximum Thdi	<48 % from 80...100 % of load conforming to IEC 61000-3-12
Electromagnetic Compatibility	Radiated radio-frequency electromagnetic field immunity test level 3 conforming to IEC 61000-4-3 Electrical fast transient/burst immunity test level 4 conforming to IEC 61000-4-4 1.2/50 µs - 8/20 µs surge immunity test level 3 conforming to IEC 61000-4-5 Conducted radio-frequency immunity test level 3 conforming to IEC 61000-4-6 Electrostatic discharge immunity test level 3 conforming to IEC 61000-4-2
Pollution Degree	2 conforming to IEC 61800-5-1
Vibration Resistance	1 gn (f= 13…200 Hz) conforming to IEC 60068-2-6 1.5 mm peak to peak (f= 2…13 Hz) conforming to IEC 60068-2-6
Shock Resistance	15 gn for 11 ms conforming to IEC 60068-2-27
Relative Humidity	5…95 % without condensation conforming to IEC 60068-2-3
Ambient Air Temperature For Operation	40…50 °C (with derating factor) -15…40 °C (without derating)
Ambient Air Temperature For Storage	-40…70 °C

Operating Altitude	1000...4800 m with current derating 1 % per 100 m <= 1000 m without derating
Product Certifications	DNV-GL UL ATEX zone 2/22 TÜV CSA ATEX zone 2/22
Marking	CE
Standards	IEC 61800-3 IEC 61800-3 environment 1 category C2 EN/IEC 61800-3 environment 2 category C3 IEC 61800-5-1 IEC 61000-3-12 IEC 60721-3 IEC 61508 IEC 13849-1
Overvoltage Category	III
Regulation Loop	Adjustable PID regulator
Noise Level	69.9 dB
Pollution Degree	3

Packing Units

Unit Type Of Package 1	PCE
Number Of Units In Package 1	1
Package 1 Height	70.0 cm
Package 1 Width	48.5 cm
Package 1 Length	144.5 cm
Package 1 Weight	107.0 kg

Sustainability

Green Premium™ label is Schneider Electric's commitment to delivering products with best-in-class environmental performance. Green Premium promises compliance with the latest regulations, transparency on environmental impacts, as well as circular and low-CO_2 products.

Guide to assessing product sustainability is a white paper that clarifies global eco-label standards and how to interpret environmental declarations.

Learn more about Green Premium >

Guide to assess a product's sustainability >

Transparency RoHS/REACh

Resource performance

Upgraded Components Available

Well-being performance

Mercury Free

Rohs Exemption Information	Yes

Certifications & Standards

Reach Regulation	REACh Declaration
Eu Rohs Directive	Pro-active compliance (Product out of EU RoHS legal scope)
China Rohs Regulation	China RoHS declaration
Environmental Disclosure	Product Environmental Profile
Weee	The product must be disposed on European Union markets following specific waste collection and never end up in rubbish bins
Circularity Profile	End of Life Information

Dimensions Drawings

Dimensions

Front and Left Views

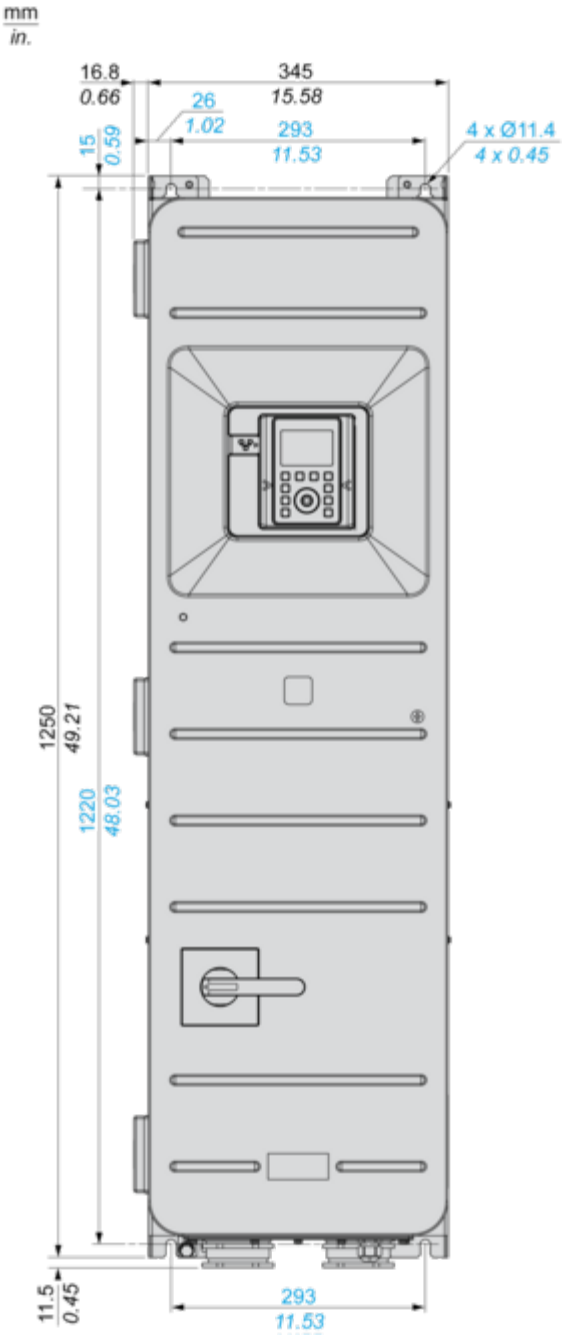
mm
in.
16.8
0.66
345
15.58
26
1.02
293
11.53
4 x Ø11.4
4 x 0.45
15
0.59
1250
49.21
1220
48.03
11.5
0.45
293
11.53

mm
in.

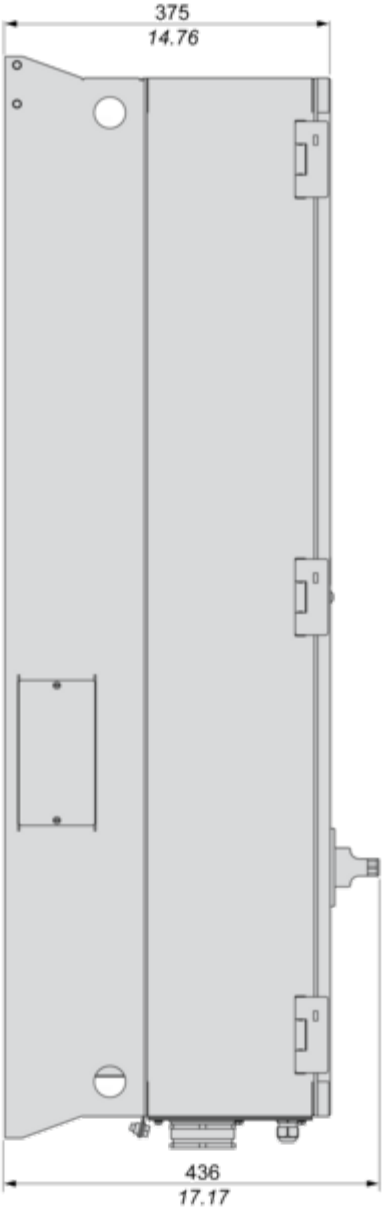

Mounting and Clearance

Clearances

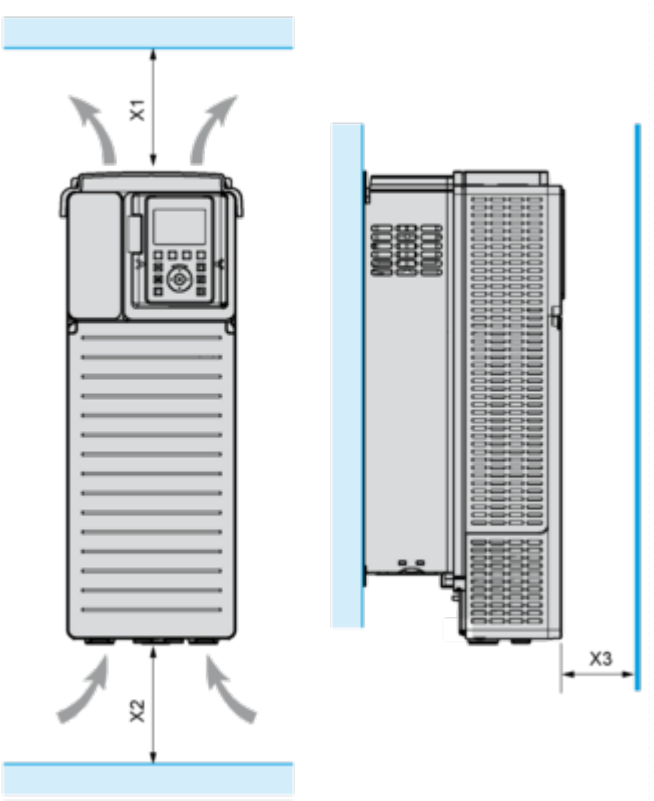

X1	X2	X3
≥ 100 mm (3.94 in.)	≥ 100 mm (3.94 in.)	≥ 10 mm (0.39 in.)

Connections and Schema

Three-Phase Power Supply with Upstream Breaking via Line Contactor

Connection diagrams conforming to standards EN 954-1 category 1 and IEC/EN 61508 capacity SIL1, stopping category 0 in accordance with standard IEC/EN 60204-1

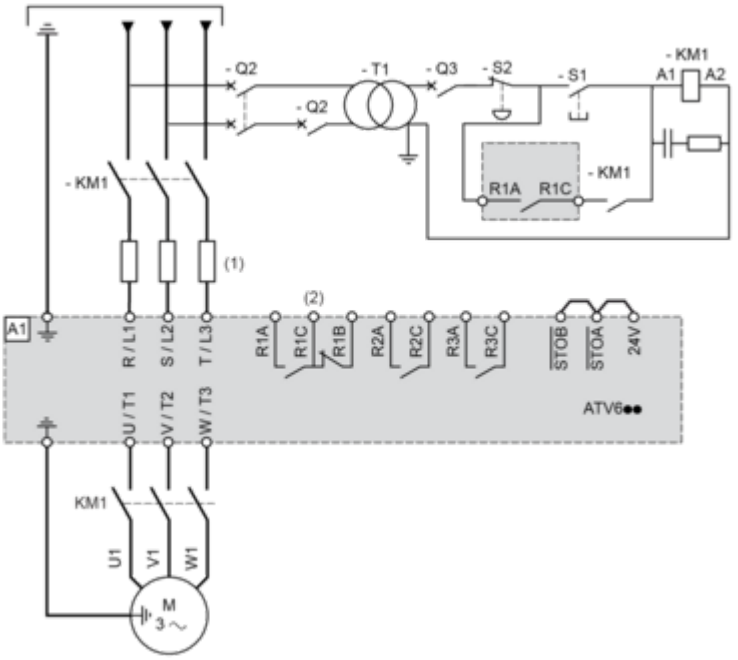

(1) Line choke if used
(2) Use relay R1 set to operating state Fault to switch Off the product once an error is detected.
A1 : Drive
KM1 : Line Contactor
Q2, Q3 : Circuit breakers
S1, S2 : Pushbuttons
T1 : Transformer for control part

Three-Phase Power Supply with Downstream Breaking via Contactor

Connection diagrams conforming to standards EN 954-1 category 1 and IEC/EN 61508 capacity SIL1, stopping category 0 in accordance with standard IEC/EN 60204-1

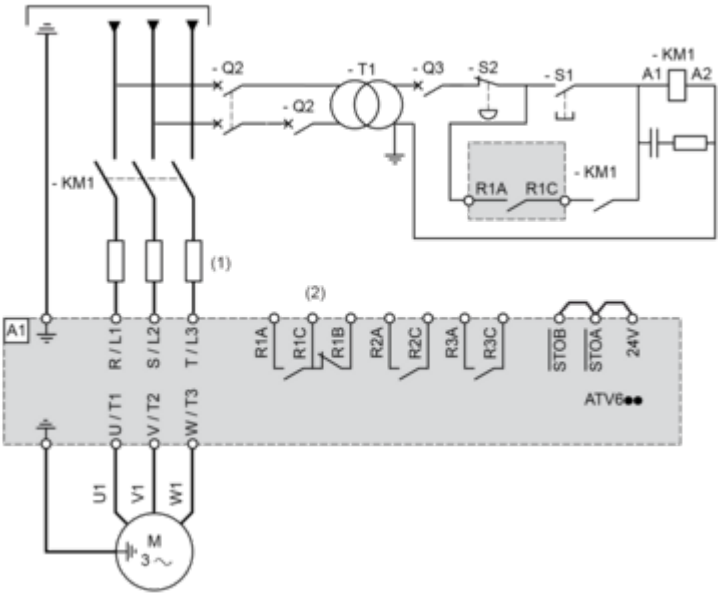

(1) Line choke if used
(2) Use relay R1 set to operating state Fault to switch Off the product once an error is detected.
A1 : Drive
KM1 : Contactor

Control Block Wiring Diagram

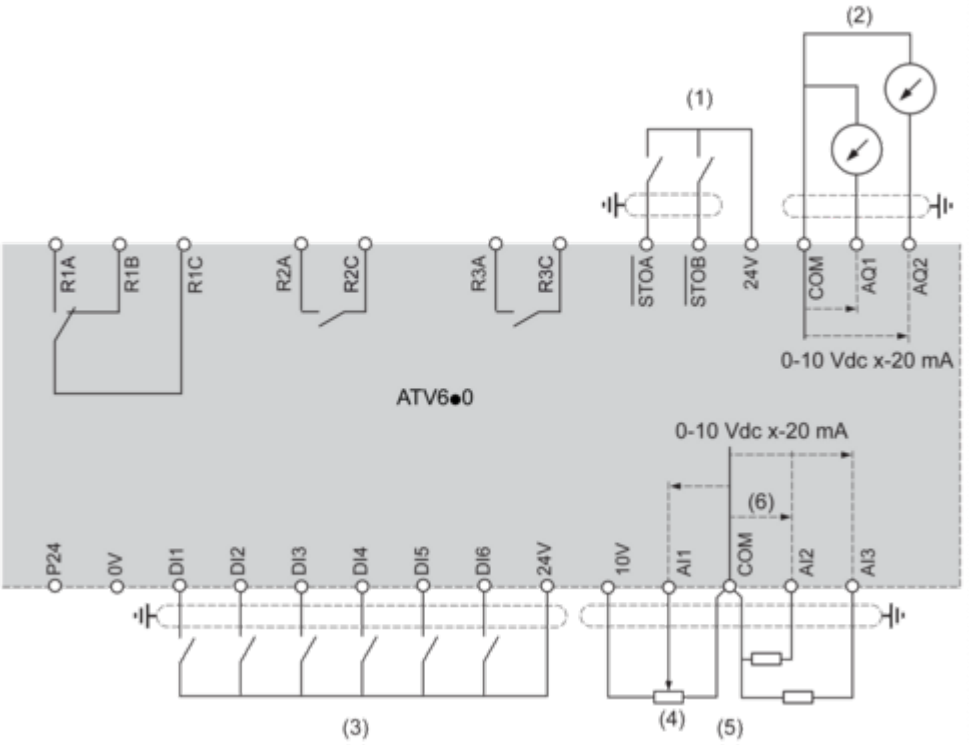

(1) Safe Torque Off
(2) Analog Output
(3) Digital Input
(4) Reference potentiometer
(5) Analog Input
R1A, R1B, R1C : Fault relay
R2A, R2C : Sequence relay
R3A, R3C : Sequence relay

Sensor Connection

It is possible to connect either 1 or 3 sensors on terminals AI2 or AI3.

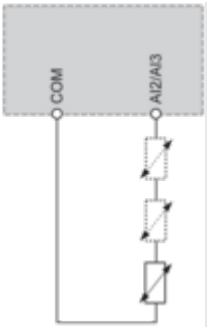

Sink / Source Switch Configuration

The switch is used to adapt the operation of the logic inputs to the technology of the programmable controller outputs.

- Set the switch to Source (factory setting) if using PLC outputs with PNP transistors.
- Set the switch to Ext if using PLC outputs with NPN transistors.

Switch Set to SRC (Source) Position Using the Output Power Supply for the Digital Inputs

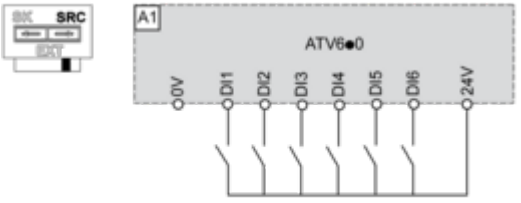

Switch Set to SRC (Source) Position and Use of an External Power Supply for the DIs

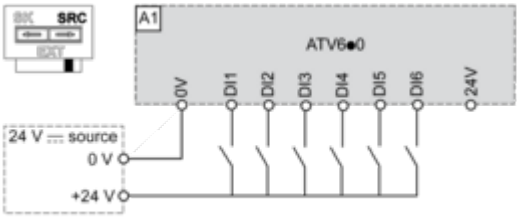

Switch Set to SK (Sink) Position Using the Output Power Supply for the Digital Inputs

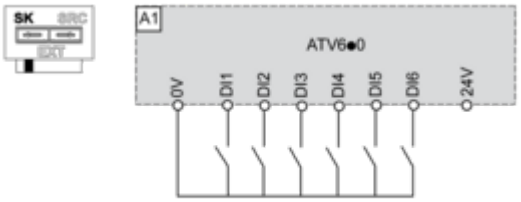

Switch Set to EXT Position Using an External Power Supply for the DIs

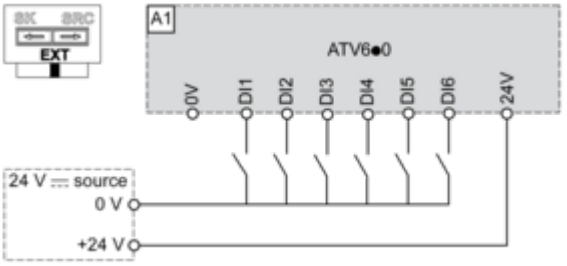

Performance Curves

Derating Curves

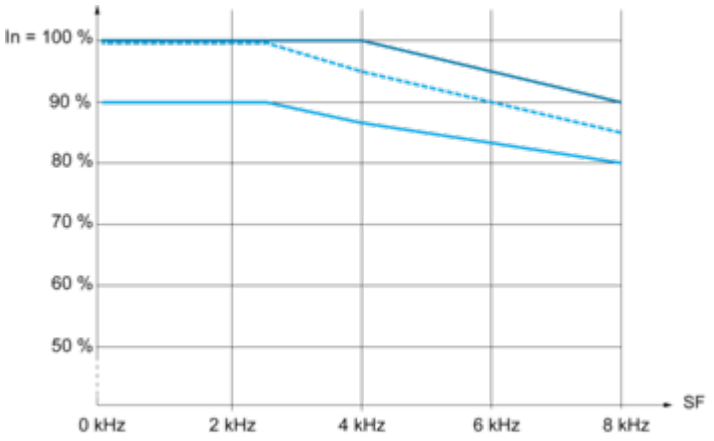

40 °C (104 °F)
45 °C (113 °F)
50 °C (122 °F)
In : Nominal Drive Current
SF : Switching Frequency