Product datasheet

Specifications



Extended rotary handle kit.TeSys GV3. IP54. red handle. with trip indication. for GV3L-GV3P

GV3APN02

Price: 1,843.26 ZAR

Main

Range	TeSys TeSys Deca
Device Short Name	GV3AP
Product Or Component Type	Rotary handle kit
Accessory / Separate Part Category	Control accessory
Handle Colour	Red
Handle Front Plate Colour	Yellow

Complementary

Product Compatibility	GV3L GV3P
Rotary Handle Padlocking	Padlock in OFF position
Rotary Handle Mounting Style	Extended
Locking Options Description	1 to 3 padlocks
Back/Door Distance	189…300 mm
Net Weight	0.3 kg

Environment

Ip Degree Of Protection	IP54

Packing Units

Unit Type Of Package 1	PCE
Number Of Units In Package 1	1
Package 1 Height	6.700 cm
Package 1 Width	9.000 cm
Package 1 Length	37.200 cm
Package 1 Weight	353.000 g
Unit Type Of Package 2	S03
Number Of Units In Package 2	12
Package 2 Height	30.000 cm
Package 2 Width	30.000 cm
Package 2 Length	40.000 cm
Package 2 Weight	4.756 kg

Excluding VAT and subject to change. Please check with your local distributor through "Where to buy"

Disclaimer: This documentation is not intended as a substitute for and is not to be used for determining suitability or reliability of these products for specific user applications

Contractual warranty

Warranty	18 months

Sustainability

Green Premium^{TM} label is Schneider Electric's commitment to delivering products with best-in-class environmental performance. Green Premium promises compliance with the latest regulations, transparency on environmental impacts, as well as circular and low-CO_2 products.

Guide to assessing product sustainability is a white paper that clarifies global eco-label standards and how to interpret environmental declarations.

Learn more about Green Premium >

Guide to assess a product's sustainability >



Transparency



RoHS/REACh

Well-being performance

Mercury Free	
Rohs Exemption Information	Yes

Certifications & Standards

Reach Regulation	REACh Declaration
Eu Rohs Directive	Compliant with Exemptions
China Rohs Regulation	China RoHS declaration Product out of China RoHS scope. Substance declaration for your information
Environmental Disclosure	Product Environmental Profile
Weee	The product must be disposed on European Union markets following specific waste collection and never end up in rubbish bins
Circularity Profile	End of Life Information

Dimensions Drawings

Mounting

Mounting of External Operator GV3APN01, GV3APN02 or GV3APN04 for Motor Circuit Breakers GV3L

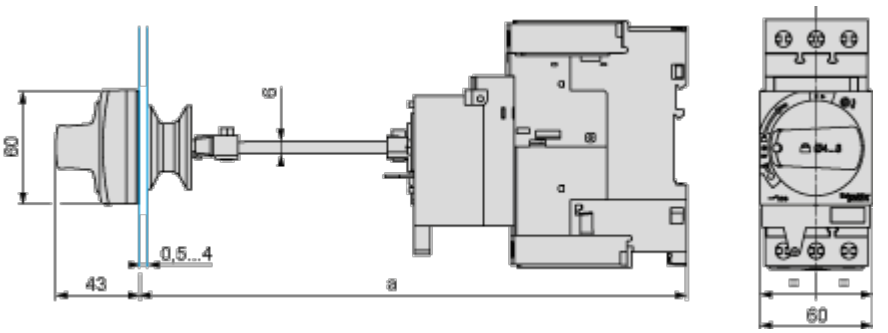

Door cut-out

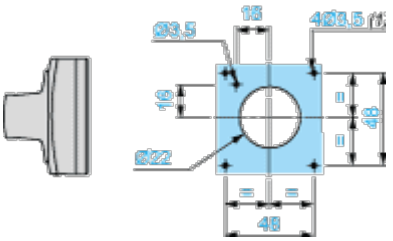

(1) For IP65 only.

Mounting of External Operator GVAPH03 for Motor Circuit Breakers GV3L

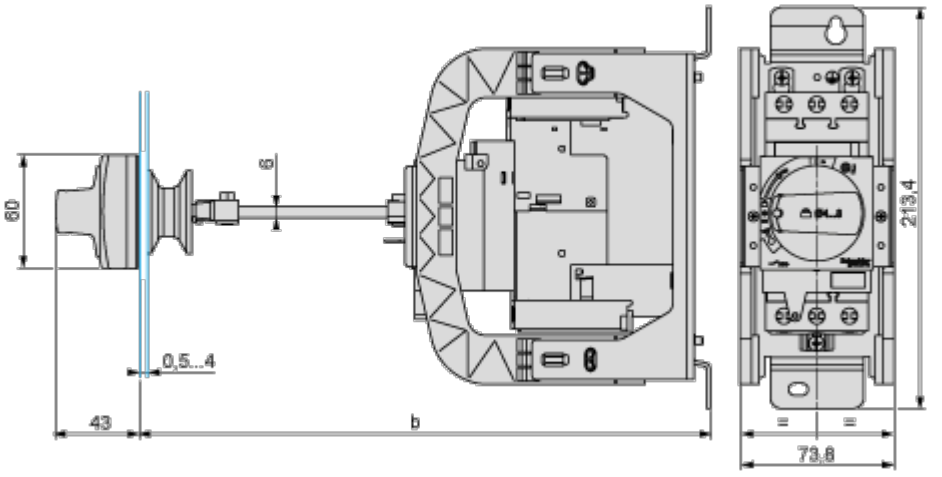

	b	
	Minimum	Maximum
GV3APN•• + GVAPH03	200	300
GV3APN•• + GVAPH03 + GVAPK12	300	492

Door cut-out

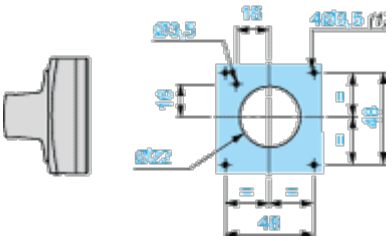

(1) For IP65 only.