Product datasheet

Specifications



Harmony XB5. Panel mounted timer monofunction. plastic. Ø22. time delay 0.5...10 s. 24 V DC

XB5DTB22

Price: 1,833.67 ZAR

Main

Range Of Product	Harmony XB5
Product Or Component Type	Timer
Sale Per Indivisible Quantity	1

Complementary

Bezel Material	Plastic
Fixing Collar Material	Plastic
Mounting Diamete	22 mm
Panel Thickness	1…6 mm
Shape Of Signaling Unit Head	Round
Time Delay Range	0.5...10 s
Time Delay Type	A
Repeat Accuracy	+/- 0.5 %
Setting Accuracy Of Time Delay	+/- 10 % of full scale at 25 °C conforming to IEC 61812-1
Temperature Drift	+/- 0.05 %/°C
Voltage Drift	+/- 0.2 %/V
Protection Type	Overvoltage protection Reverse polarity protection
Pollution Degree	3 conforming to IEC 60664-1
Output Type	Open collector PNP
Temporary Permissible Current	10 A for 0.01 s
Minimum Switching Current	10 mA
Voltage Drop In Closed State	3 V
Nominal Rating	200 mA at 20 °C(derating 1.5 mA per °C)
Residual Current In Open State	0.1 mA
Maximum Power Consumption In W	1 W
Reset Time	5 ms after time delay on de-energisation 7 ms during time delay on de-energisation
Local Signalling	LED green, flashing for timing in progress LED, steady for no timing in progress and output relay energised
[Us] Rated Supply Voltage	24 V DC
Supply Voltage Limits	16.8…31.2 V DC

Excluding VAT and subject to change. Please check with your local distributor through "Where to buy"

Disclaimer: This documentation is not intended as a substitute for and is not to be used for determining suitability or reliability of these products for specific user applications

Output Short-Circuit Protection	Yes
Connections - Terminals	Screw terminals 1 x 4 mm² conforming to IEC 60947-1 Screw terminals 1 x 2.5 mm² conforming to IEC 60947-1
Ip Degree Of Protection	IP65 front: conforming to IEC 60529 IP20 back: conforming to IEC 60529
Ambient Air Temperature For Operation	-20…60 °C
Ambient Air Temperature For Storage	-20…80 °C
Tightening Torque	0.5 N.m
Dielectric Strength	1500 V conforming to IEC 61812-1
[Ui] Rated Insulation Voltage	50 V conforming to IEC 60947-1 50 V conforming to IEC 60664-1
[Uimp] Rated Impulse Withstand Voltage	4 kV conforming to IEC 60947-1 4 kV conforming to IEC 60664-1
Surge Withstand	1 kV, level 2 conforming to IEC 61000-4-5
Overvoltage Category	Class 3 conforming to IEC 60536 Class 3 conforming to IEC 60664-1
Vibration Resistance	0.15 mm (f= 10…60 Hz) conforming to IEC 60068-2-6 2 gn (f= 60…150 Hz) conforming to IEC 60068-2-6
Shock Resistance	+/- 15 gn for 11 ms (6 shocks on each axis) conforming to IEC 60068-2-27
Resistance To Fast Transients	2 kV class level 3 conforming to IEC 61000-4-4
Electromagnetic Compatibility	Electrostatic discharge 6 kV level 3 conforming to IEC 61000-4-2 Electromagnetic emission class B conforming to IEC 55011
Resistance To Electromagnetic Fields	10 V/m 80 MHz...1 GHz level 3 conforming to IEC 61000-4-3 3 V/m 1.4...2 GHz level 2 conforming to IEC 61000-4-3 1 V/m 2...2.7 GHz level 1 conforming to IEC 61000-4-3
Immunity To Radioelectric Fields	10 V level 3 conforming to IEC 61000-4-6
Disturbance Radiated/Conducted	Class B conforming to EN 50022
Standards	IEC 61812-1 UL 508
Product Certifications	CE UL listed
Device Presentation	Monolithic product
Height	62 mm
Diameter	29 mm
Net Weight	0.027 kg

Packing Units

Unit Type Of Package 1	PCE
Number Of Units In Package 1	1
Package 1 Height	2.600 cm
Package 1 Width	3.000 cm
Package 1 Length	7.400 cm
Package 1 Weight	28.000 g
Unit Type Of Package 2	S01
Number Of Units In Package 2	72
Package 2 Height	15.000 cm

Package 2 Width	15.000 cm
Package 2 Length	40.000 cm
Package 2 Weight	2.339 kg

Sustainability

Green Premium^{TM} label is Schneider Electric's commitment to delivering products with best-in-class environmental performance. Green Premium promises compliance with the latest regulations, transparency on environmental impacts, as well as circular and low-CO_2 products.

Guide to assessing product sustainability is a white paper that clarifies global eco-label standards and how to interpret environmental declarations.

Learn more about Green Premium >

Guide to assess a product's sustainability >



RoHS/REACh

Well-being performance

Mercury Free	
Rohs Exemption Information	Yes

Certifications & Standards

Reach Regulation	REACh Declaration
Eu Rohs Directive	Pro-active compliance (Product out of EU RoHS legal scope)
China Rohs Regulation	China RoHS declaration
Weee	The product must be disposed on European Union markets following specific waste collection and never end up in rubbish bins

Dimensions Drawings

Dimensions

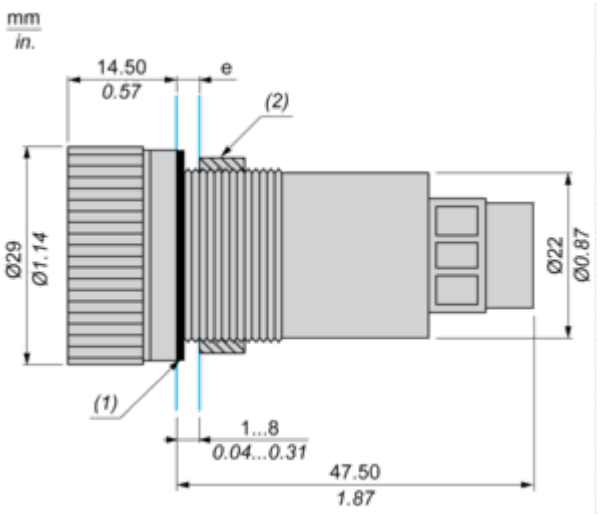

(e) Clamping thickness: 1 mm to 6 mm / 0.03 in. to 0.24 in.
(1) Sealing ring
(2) Screw

Mounting and Clearance

Panel Cut-out for Analog Timer (Finished Holes, Ready for Installation)

Connection by Screw Clamp Terminals or Plug-in Connectors

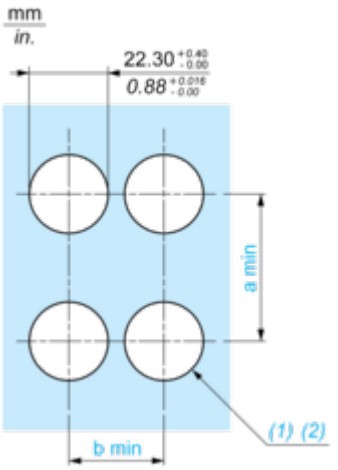

(1) Diameter on finished panel or support

(2) Ø22 mm recommended (Ø22.3 0+0.4) / Ø0.89 in. recommended (Ø0.88 in. $0^{+0.016}$)

Connections	a in mm	a in in.	b in mm	b in in.
By screw clamp terminals or plug-in connector	50	1.97	30	1.18

Connections and Schema

Wiring Diagram

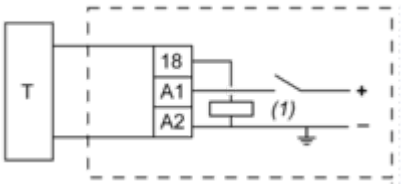

T : Timer
(1) Load
A1 - A2 : Supply (24VDC)

Technical Description

Function A : On Delay Timer

Description

The timing period T begins on energisation with blinking LED indication. After timing, the output (18) closes and LED goes steady

Function: Output



De-energised
Energised
Output open
Output closed
(18) Timed output
(A1- A2) Supply