Product datasheet

Specifications



Harmony XB5. Panel mounted RJ45 port. plastic. Ø22. for ethernet interface. RJ45 jack

XB5PRJ45

Price: 879.02 ZAR

Main

Range Of Product	Harmony XB5
Product Or Component Type	Panel mounted RJ45 port
Device Short Name	XB5P

Complementary

Sale Per Indivisible Quantity	1
Mounting Diamete	22 mm
Thickness	6 mm without protection cover 1.5…5 mm with protection cover plastic 1.5…5 mm with protection cover rigid plastic 1.5…2.5 mm with protection cover metal
Bezel Material	Plastic
Fixing Collar Material	Plastic
Integrated Connection Type	RJ45 Ethernet 10 Gbit/s
Minimum Number Of Matings	750 cycles
Ip Degree Of Protection	IP20 front: conforming to IEC 60529 IP20 back: conforming to IEC 60529
Ambient Air Temperature For Operation	-40…70 °C
Ambient Air Temperature For Storage	-40…70 °C
Tightening Torque	1.5 N.m
Vibration Resistance	5 gn (f= 10…500 Hz) conforming to IEC 60068-2-6
Standards	IEC 60603-7
Product Certifications	UL listed CSA
Height	28 mm
Width	28 mm
Depth	36 mm
Net Weight	0.0266 kg

Packing Units

Unit Type Of Package 1	PCE
Number Of Units In Package 1	1
Package 1 Height	3.600 cm
Package 1 Width	8.100 cm

Excluding VAT and subject to change. Please check with your local distributor through "Where to buy"

Disclaimer: This documentation is not intended as a substitute for and is not to be used for determining suitability or reliability of these products for specific user applications

Package 1 Length	8.300 cm
Package 1 Weight	26.000 g
Unit Type Of Package 2	S02
Number Of Units In Package 2	100
Package 2 Height	15.000 cm
Package 2 Width	30.000 cm
Package 2 Length	40.000 cm
Package 2 Weight	2.850 kg

Sustainability

Green Premium^{TM} label is Schneider Electric's commitment to delivering products with best-in-class environmental performance. Green Premium promises compliance with the latest regulations, transparency on environmental impacts, as well as circular and low-CO_2 products.

Guide to assessing product sustainability is a white paper that clarifies global eco-label standards and how to interpret environmental declarations.

Learn more about Green Premium >

Guide to assess a product's sustainability >



RoHS/REACh

Well-being performance

Reach Free Of Svhc	
Toxic Heavy Metal Free	
Mercury Free	
Rohs Exemption Information	Yes

Certifications & Standards

Reach Regulation	REACh Declaration
Eu Rohs Directive	Pro-active compliance (Product out of EU RoHS legal scope) EU RoHS Declaration
China Rohs Regulation	China RoHS declaration
Weee	The product must be disposed on European Union markets following specific waste collection and never end up in rubbish bins

Dimensions Drawings

Dimensions

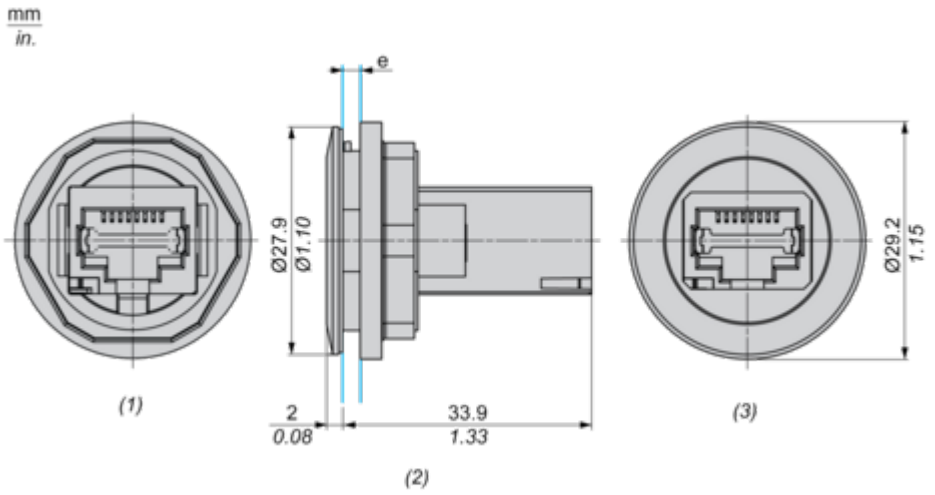

(1) Back view
(2) Side view
(3) Front view
(e)

	Clamping thickness without accessory: 1.5 mm to 5 mm / 0.05 in to 0.19 in Clamping thickness with ZBSP1 & ZBSP2: 1.5 mm to 5 mm / 0.05 in to 0.19 in Clamping thickness with ZBSP3: 1.5 mm to 2.5 mm / 0.05 in to 0.10 in

Mounting and Clearance

Panel Cut-out for Panel Mounted RJ45 Port

Connection by Screw Clamp Terminals or Plug-in Connectors

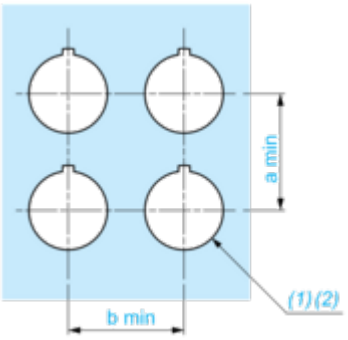

(1) Diameter on finished panel or support
(2) Ø22.5 mm recommended (Ø22.3 0+0.4) / Ø0.89 in. recommended (Ø0.88 in. 0+0.016)

Connections	a in mm	a in in.	b in mm	b in in.
By screw clamp terminal or plug-in connector	35	1.38	35	1.38

Panel Cut-out

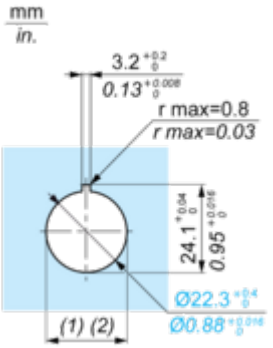

(1) Diameter on finished panel or support
(2) Ø22.5 mm recommended (Ø22.3 0+0.4) / Ø0.89 in. recommended (Ø0.88 in. 0+0.016)