DCTLA4800600

THYRISTOR MODULE, 60KVAR AT 480VAC, RATED OPERATING VOLTAGE 400...480VAC, WITH CURRENT CONTROL



Product designation			Thyristor modules
Product type designation			DCTL
General characteristics			
Rated voltage		V	400…480
Operating voltage range			340…528
Rated frequency		Hz	50/60
Operating frequency range		Hz	45…65
Rated current (Ie)		A	72
Step power at			
	400VAC	kvar	60
	440VAC	kvar	55
	480VAC	kvar	60
Peak inverse voltage (PIV)		VAC	2200
Number of controlled phases		Nr.	2
Control circuit			12-24VDC input or free-voltage input or via RS485 serial port (with optional card EXC1042 in combination with controller DCRG8F + EXP1012)
Auxiliary supply			
Rated auxiliary supply voltage Us AC			
	min	VAC	100
	Max	VAC	240
Auxiliary rated frequency		Hz	50/60
Power consumption Max		VA	14.1
Power dissipation Max		W	5.8
Control input			
Terminals			CONTROL +/-
Rated voltage			12-24VDC
Operating range			8…30VDC
Digital inputs			
Terminals			C-IN1
Applied voltage at contact (internal)			5VDC
Input current		mA	≤10
Low input signal		VDC	≤0.8
High input signal		VDC	≥3.2
Input signal delay		ms	≥50
NTC probe input			
Terminals			NTC-NTC

The characteristics described in this document are subject to updates or modifications at any time. The descriptions, technical and functional information, illustrations and instructions in this brochure are purely illustrative, and are consequently not contractually binding

Sensor type			NTC (ordering code NTC01)
Measuring range		°C	-25…+85
Maximum connection lenght		mt	3
Fan power supply			
Terminals			FAN +/-
Supply voltage (internal)			5VDC (provided by DCTL)
Fan type			2 built-in fans type EXP8004
Relay outputs			
Number of relay output		Nr.	1
Contact arrangement			1 C/O-SPDT
Rated current			NO contact: AC1 5A 250VAC / 5A 30VDC NC contact: AC1 3A 250VAC / 3A 30VDC
UL/CSA and IEC/EN 60947-5-1 designation			D300
Maximum switching voltage		VAC	250
Electrical life (with rated load)		cycles	NO contact: $10x10^3$ NC contact: $20x10^3$
Mechanical life		cycles	10^7
Insulations			
Rated insulation voltage Ui IEC/EN		V	480
Rated impulse withstand voltage Uimp		kV	4
Connections - power terminals			
Type of terminal			Fixed - double lock clamp
Conductor cross section			
	min	mm^2	2 x 2.5
	Max	mm^2	2 x 35
	min	AWG	2 x 18
	Max	AWG	2 x 2
Tightening torque (Max)			
		Nm	5.5-6.5
		lbin/lbft	4.06-4.79 lbft
Connections - relay output			
Type of terminal			Screw
Conductor cross section			
	min	mm^2	0.2
	Max	mm^2	4
	min	AWG	26
	Max	AWG	10
Tightening torque (Max)			
		Nm	0.8
		lbin	7
Connections - fan and digital input			
Type of terminal			Screw
Conductor cross section			
	min	mm^2	0.2
	Max	mm^2	2.5

The characteristics described in this document are subject to updates or modifications at any time. The descriptions, technical and functional information, illustrations and instructions in this brochure are purely illustrative, and are consequently not contractually binding

		min	AWG	24
		Max	AWG	12
Tightening torque (Max)				
			Nm	0.44
			lbin	4
Ambient conditions				
Temperature				
	Operating temperature			
		min	°C	-20
		max	°C	+45°C without derating (up to 55°C with derating)
	Storage temperature			
		min	°C	-30
		max	°C	+80
Relative humidity			%	<80%
Maximum Pollution degree				2
Overvoltage category				III
Max altitude			m	2000m wihtout derating
Climatic sequence				Z/ABDM (IEC/EN 60068-2-61)
Shock resistance				15g (IEC/EN 60068-2-27)
Vibration resistance				0.7g (IEC/EN 60068-2-6)
Housing				
Execution				Internal panel version
Material				Polycarbonate
Mounting				Screw fixing or DIN-rail (IEC/EN 60715) with optional accessory EXP8003
Degree of protection				IP00
Dimensions (W x H x D)			mm	95 x 226 x 182
Weight			g	2840
Dimensions				

The characteristics described in this document are subject to updates or modifications at any time. The descriptions, technical and functional information, illustrations and instructions in this brochure are purely illustrative, and are consequently not contractually binding

DCTLA4800600

THYRISTOR MODULE, 60KVAR AT 480VAC, RATED OPERATING VOLTAGE 400...480VAC, WITH CURRENT CONTROL

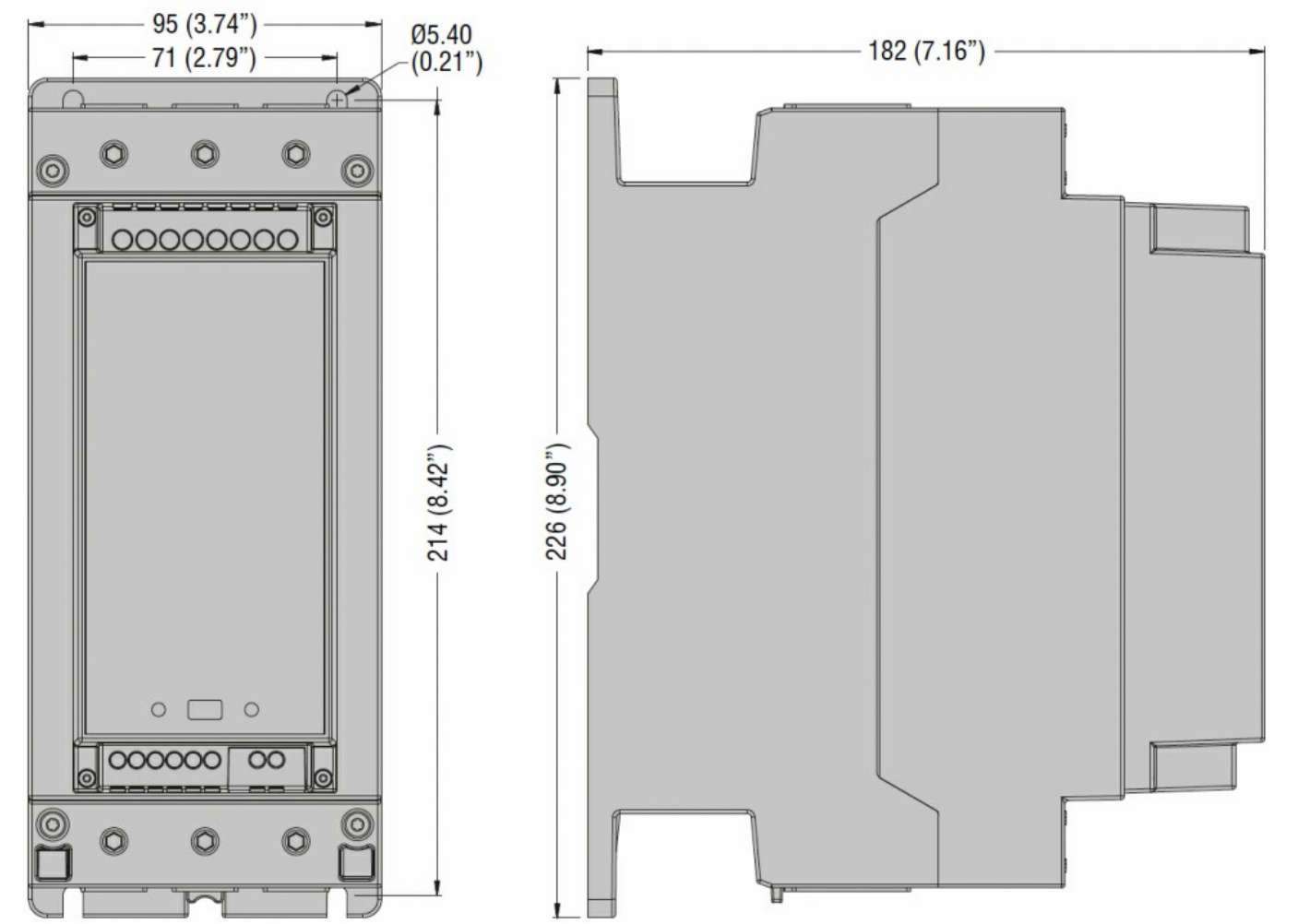

Wiring diagrams

DCTL

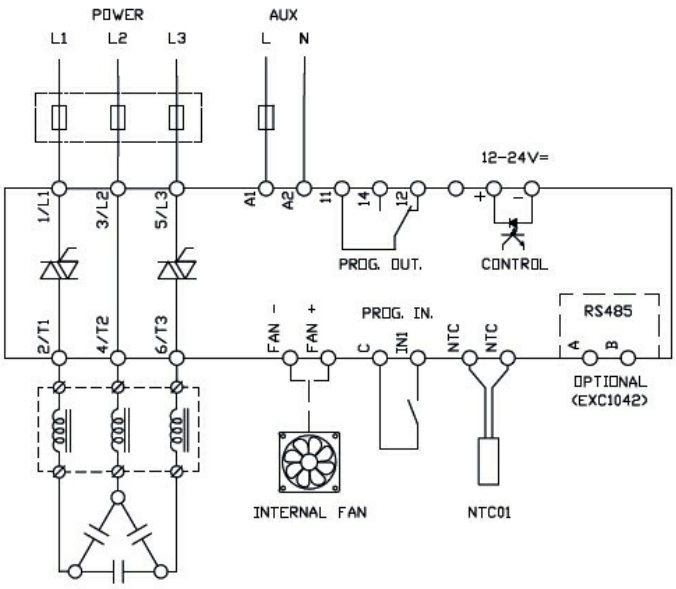

Certifications and compliance

Compliance

IEC/EN 60947-4-3
IEC/EN 61000-6-2
IEC/EN 61000-6-4

The characteristics described in this document are subject to updates or modifications at any time. The descriptions, technical and functional information, illustrations and instructions in this brochure are purely illustrative, and are consequently not contractually binding

Certificates

cULus

ETIM classification

ETIM 8.0	EC002055 - Solid state relay

The characteristics described in this document are subject to updates or modifications at any time. The descriptions, technical and functional information, illustrations and instructions in this brochure are purely illustrative, and are consequently not contractually binding